SIBO

PRODUCT BROCHURE

SHANGHAI SIBO AUTOMATION CO.,LTD.
Add: RM 1603, Block A, No. 688 Dalian Road, Yangpu District, Shanghai,China
Post Code:200082
Tel: +86 21 65696975 / 65859838 (Sales)
+86 21 51866494 / 51866495-253 (After-sale Service)
Fax:+86 21 65370272
Website:www.sibo.com.cn
E-mail:info@sibo.com.cn

SHANGHAI NORIS-SIBO AUTOMATION CO.,LTD.
Add: G/F, No.8 Building South,No.2716 Pingliang Road, Yangpu District, Shanghai, China
Post Code:200090
Tel: +86 21 68761180 / 68761190
Fax:+86 21 68758808
Website:www.noris-sibo.com
E-mail:info@ noris-sibo.com

SERVICE STATION IN SINGAPORE
Add:48 Toh Guan Road East,#04-155 Enterprise Hub,Singapore
Post Code:608586
Tel: +65 62678061
Fax:+65 62678062

JIANGSU SIBO ELECTRIC CO.,LTD.
Add: No.18, Tuanjie Road, Chang Xin Industrial Park, Dafeng District, Yancheng , Jiangsu ,China
Post Code:224100
Tel: +86 515 83395888
Fax:+86 515 83608618
Website: www.sibo.com.cn
E-mail:sibo.jiangsu@163.com

GRAW MET SYSTEMS(SHANGHAI) CO.,LTD.
Add: RM 1603, Block A, No. 688 Dalian Road, Yangpu District, Shanghai,China
Post Code:200082
Tel: +86 21 65864384
Fax:+86 21 65370272
Website:www.graw.com.cn
E-mail:info@graw.cn

SIBO GROUP

CONTENTS

Company Introduction

01 SK510 Main Propulsion Machinery Remote Control System

02 SK520 Main Propulsion Machinery Remote Control System

03 SB-2001 Monitoring and Alarm System

04 SB-98K Propulsion Machinery Remote Control System

05 SB-98K-D-I Propulsion Machinery Remote Control System

06 SB-3000 Monitoring and Alarm System

07 CSBPZ Main Switchboard

08 CSBPY Emergency Switchboard

09 Power Management System

10 SB-LV Gauge Level Remote Control /
SB-RCV-I Hydraulic Valve Remote Control System

11 SB-WCX-III Intergrated Monitoring and Control System for Dredgers

12 CSBJ Marine Control Consoles

13 SB-NL/SB-SL Navigation Lights/Signal Lights Controller

14 SB-BNWAS Navigation Watch Alarm System

15 SB-TE-M Telegraph System

16 SB-TR Telegraph Automatic Recorder

17 SD-WD Foghorn Controller

COMPANY INTRODUCTION

SIBO GROUP

SIBO Group consists of the mother company, Shanghai SIBO Monitor Technique Engineering Co. Ltd., and four affiliate companies - Shanghai SIBO Automation Co., Ltd. Jiangsu SIBO Electrics Co., Ltd. and Shanghai Noris-SIBO Automation Co., Ltd.and Shanghai GRAW MET System Co., Ltd.

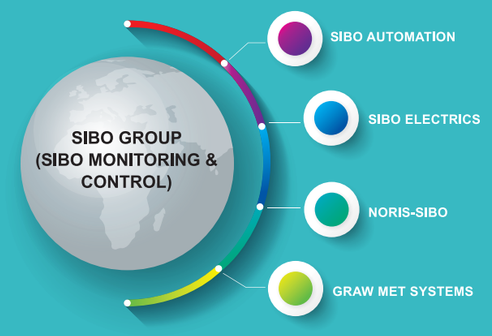

Shanghai SIBO Monitor Technique Engineering Co. Ltd. (SIBO) was established in 1992. Since then, the firm mainly involves itself in designing and manufacturing automation systems for ships and has provided products and services for over 2,000 vessels either domestic or international, which has built a good image and enjoyed an excellent reputation among our clients.

In 2004, Shanghai Noris-SIBO Automation Co. Ltd. was established as a joint venture by SIBO Group and Noris Group from Germany. The main products of this joint venture include engine room monitoring and alarm control system, main engine remote control system, all kinds of instruments and sensors from German Noris and engine room intergrated control consles, bridge control consoles and switch boards from Shanghai SIBO. In high-speed railway industry, Noris-SIBO supplies special temperature and speed sensors and provides technical support.

In 2009, SIBO invested to establish Jiangsu SIBO Electronics Co. Ltd. and Shanghai SIBO Automation Co. Ltd. to meet the needs of its business's growth and expansion.

Jiangsu SIBO Electronics Co. Ltd. (SIBO Electronics), taking over 100 acres, is housed in a modern industrial plant, at Dafeng, Changzhou Jiangsu. Its main business is to design and manufacture marine switchboards, aiming to gradually become the central base of production and assembly for all SIBO products.

Shanghai SIBO Automation Co. Ltd. (SIBO Automation) takes over the existent business from Shanghai SIBO Monitor Technique Engineering Co. Ltd. (SIBO), together with its human resources, managerial systems and core technologies. Intended to function as a center of new and high technology research and development, system integration and a global service provider, SIBO Automation mainly involves itself in designing and manufacturing automatic equipments for shipping, aiming to gradually become the R&D and Sales center of SIBO products.

The main products of Shanghai SIBO Automation Co. Ltd. comprise micro-computer monitoring and alarm systems, main engine remote control systems, a main engine safety system, engine local monitoring cabinets, a main engine RPM meter, a shipping telegraph system, a shipping telegraph recording system, engine control consoles, navigation/signal lighting controllers, foghorn controllers, an integrated engineers calling system, dredger control systems, and etc., which have been classified by classification societies such as CCS, ABS, BV, KR and so on.

Our firm has set up a high-standard domestic team for customer service which is newly expanded to Singapore to meets the needs of our clients both international and home-based.

In 2013, SIBO GROUP spins to set up Shanghai GRAW MET Systems to provide specialized service to customers in meteorological area.

With its advanced technology, quality products and excellent customer services, SIBO Automation makes every endeavor to serve its clients at a reasonable cost.

CERTIFACATE OF QUALIFICATION

中国船级社质量认证公司
中国新时代认证中心
美国船级社(ABS)
德国船级社(GL)
法国船级社(BV)
中国船级社(CCS)
韩国船级社(KR)
日本船级社(NK)
挪威船级社(DNV)
英国船级社(LR)

01 SK510 SERIES MAIN PROPULSION MACHINERY REMOTE CONTROL SYSTEM

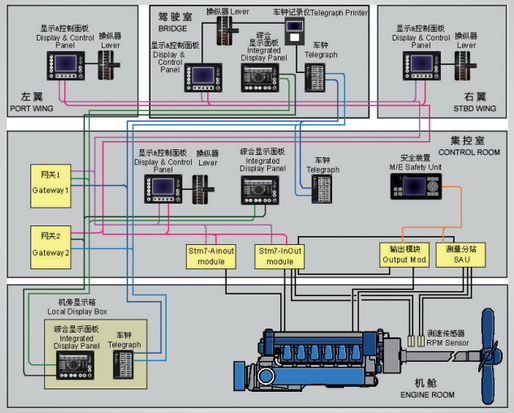

PRODUCT OVERVIEW

SK510 main propulsion remote control system is of modular structure. The remote control system is modular composition which can be designed depending on actual demands of customers. The communication between each module is through redundancy CAN - BUS field bus. SK510-AD is suitable for the main propulsion machinery remote control system of the full rotary propeller, including bridge control, local control, backup control, etc.

SK510-CPP is suitable for the main propulsion machinery remote control system of controllable pitch propeller,including bridge control, wing control, ECR control, local control, bridge backup control, ECR backup control, etc. SK510-D-I is suitable for low or medium speed main propulsion unit of reversible fixed pitch propeller. It can be used to direct start main diesel engine remotely, reverse and speed in the bridge or ECR. SK510-I is suitable for the unidirectional medium-speed machine with reversing clutch gearbox of main propulsion. It can be used to remote control the main diesel engine speed, and its engaging, disengaging or reversing of the gearbox in the bridge or ECR.

The design of this system and available environment condition is in accordance with the requirements of main classification societies.

FUNCTION DESCRIPTION

SK 510-AD Azimuth Propeller Remote Control System:

1. Rudder azimuth servo control in the bridge and automatic control of the host;
2. Independent bridge backup control mode;
3. The azimuth measurement using the resolution of 12 bit (4096) single ring absolute encoder;
4. When the propeller is driven by frequency conversion motor, the remote control system can realize automatic control of start, stop and speed setting of a motor;
5. In case the propeller is adjustable pitch, the remote control system can realize automatic control;
6. When the power source of propeller is from a diesel engine, the remote control system can realize automatic control of engine speed;
7. When using a clutch shaft, remote control system can realize automatic control of clutch;
8. Accept autopilot commands to control;
9. Accept commands of dynamic positioning system to control;
10. The servo control of the rudder azimuth of remote control system is suitable for different hydraulic systems, such as quantitative pump, variable pump and attached pump, etc.;
11. Main power failure protection;
12. It provides RS485 communication interface to VDR;

SK 510-CPP Controllable Pitch Propeller Remote Control System:

1. The fully follow-up combinatory control of the main engine speed and the propeller pitch from bridge control station;
2. The fully follow-up combinatory control of the main engine speed and the propeller pitch from bridge wing control station;
3. The fully follow-up combinatory control of the main engine speed and the propeller pitch from ECR control station;
4. The manual control of the propeller pitch form local control cabinet;
5. Separate propeller pitch backup control button both at the bridge and ECR,whose control mode is open-loop control;
6. Emergency stop and Override buttons both at bridge control station and ECR control station;
7. With remote control, you can choose main engine constant speed control or no-constant speed control;
8. With remote control, you can choose in-harbor program or at-sea program;
9. With remote control, you can choose closed-loop control or open-loop control to set main engine speed;
10. With remote control, there is automatic load protection for the main engine;
11. Main power failure protection;
12. It provides RS485 communication interface to VDR;

SK 510-D-I Reversible Fixed Propeller Propulsion Machinery Remote Control System:

1. Main engine remote control has starting interlock function;
2. Main engine remote control has three times repeat starting function;
3. Main engine remote control has ahead and astern reversing function;
4. Independent ECR back-up emergency control (option);
5. Main engine remote control has emergency reversing function;
6. Main engine remote control has slow turning function;
7. Main engine remote control has load acceleration and deceleration program control function;
8. Main engine remote control has automatic critical speed avoiding function;
9. Main engine remote control has maximum speed limit function;
10. Self-check function;
11. Cooperating with security system to realize the shutdown, slowdown protection and alarm function;
12. Cooperating with security system to realize the shutdown and slowdown override function;
13. It provides RS485 communication interface to VDR;
14. Auxiliary blower control function;
15. Keeps the function of main engine local control;

SK 510-I Propulsion Machinery Remote Control System of Single-Way Machine With Reversible Clutch Gearbox:

1. The remote control of main engine's speed setting and gearbox's engagement、disengagement and reversion;
2. There is a main engine speed increase and decrease load program to prevent main engine thermal load dramatic changes;
3. The speed's closed-loop control function to make up the lack of the governor performance;
4. The selection of open-loop or closed-loop control of the main engine's speed;
5. Low speed regular reversion and emergency astern control;
6. Cooperating with security system to realize the slowdown function;
7. Emergency disengagement function at shutdown;
8. Avoiding critical speed automatically;
9. Max speed limit;
10. Emergency stop function;
11. Cooperating with security system to realize shutdown, slowdown and override function;
12. Main power failure protection;
13. Air pressure low protection;
14. Self-check function;
15. Keeps manual speed governing function of main engine;
16. It provides RS485 communication interface to VDR;

TECHNICAL SPECIFICATIONS:

- Model: SK510;
- Air source unit (option): Working air pressure ranges from 0.65 to 0.68 MPa, the input air should be clean and dry compressed air,whose pressure ranges from 1.0 to 1.5 MPa, with the air filter, precision less than 50u;
- Power source: two routes, one AC220V and the other DC 24V(ripple coefficient less than ±5%, voltage fluctuation less than ±20%) with power consumption for each control station less than 100 Watts;
- Working environment temperature:from-5°C to +55°C;

02 SK520 MAIN PROPULSION MACHINERY REMOTE CONTROL SYSTEM

PRODUCT OVERVIEW

SK520 remote control system is modular composition which can be designed depending on actual demands of customers.

This remote system can be applied to different main propulsion through the different hardware configuration and software program.

SK520 –CPP propulsion remote system is suitable for controllable pitch propeller. It includes bridge main control, bridge wing control, engine control room, local control, backup control. Only one control station at one control mode can be active at one time.

SK520-Y-3 propulsion remote system is suitable for the unidirectional medium-speed machine with reversing clutch gear box of main propulsion. It can be used in setting the main diesel engine speed, its engagement, disengagement or reversing of the gear box in the bridge or ECR. It includes bridge main control, bridge wing control, engine control room, local control. Only one control station at one control mode can be active at one time.

The design of this system and its environment condition is in accordance with the requirements of all classification societies.

TECHNICAL SPECIFICATIONS:

- Model: SK520;
- Air source unit (option): Working air pressure ranges from 0.65 to 0.68 MPa, the input air should be clean and dry compressed air,whose pressure ranges from 1.0 to 1.5 MPa, with the air filter, precision less than 50u;
- Power source: two routes, one AC220V and the other DC 24V(ripple coefficient less than ±5%,voltage fluctuation less than ±20%) with power consumption for each control station less than 100 Watts;
- Working environment temperature:from-5°C to +55°C;

SIBO MONITORING CONTROL

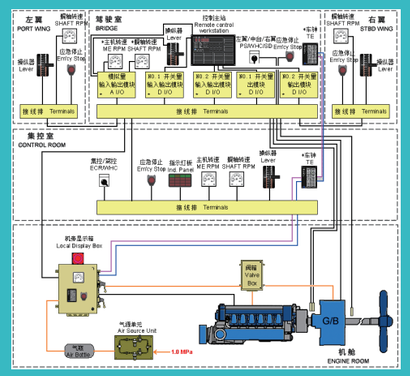

FUNCTION DESCRIPTION

SK 520-CPP Controllable Pitch Propeller Remote Control System:

1. The remote control of main engine's speed and gearbox's engagement,disengagement and reversion;
2. There is a main engine speed increase and decrease load program to prevent main engine thermal load dramatic changes;
3. The speed's closed-loop control function to make up the lack of the governor performance;
4. The selection of open-loop or closed-loop control of the main engine's speed;
5. Low speed regular reversion and emergency astern control;
6. Cooperating with safety system to realize the slowdown function;
7. Emergency disengagement function at shutdown;
8. Avoiding critical speed automatically;
9. Max speed limit;
10. Emergency stop function;
11. Cooperating with safety system to realize shutdown, slowdown and override function;
12. Main power failure protection;
13. Air pressure low protection;
14. Self-check function;
15. It provides RS485 communication interface to VDR;

SK 520-Y-3 Propulsion Remote Control System of Single-way Medium Speed Engine with Reversible Fixed Propeller:

1. The fully follow-up combinatory control of the main engine speed and the propeller pitch from bridge control station;
2. The fully follow-up combinatory control of the main engine speed and the propeller pitch from bridge wing control station;
3. The fully follow-up combinatory control of the main engine speed and the propeller pitch from ECR control station;
4. The manual control of the propeller pitch from the local control cabinet;
5. Separate propeller pitch backup control button both at bridge and ECR, whose control mode is open-loop control;
6. Emergency stop and Override buttons both at bridge control station and ECR control station;
7. With remote control, one can choose main engine constant speed control or no-constant speed control;
8. With remote control, one can choose in harbor program or at sea program;
9. With remote control, one can choose closed-loop control or open-loop control of main engine speed;
10. With remote control,there is automatic load protection for main engine;
11. Main power failure protection;
12. It provides RS485 communication interface to VDR;

驷博集团
SIBO GROUP

03 SB-2001 MONITORING & ALARM SYSTEM

PRODUCT OVERVIEW

SB-2001 Monitoring & Alarm System is mainly used in the engine room to measure, calculate, display(in graphics), detect and track thermotechnical parameters, such as power sets, ballast water, gauge level and of the power plant.

The main computer of our system to control the process is an industry mainstream computer, whose software, programmed in VC++, runs under Microsoft WIN7. Our system is highly effective, efficient and reliable in detecting and alarming, which fully satisfies the requirements of an unmanned engine room. The substation makes use of the specialized micro-system with its software written in the assembly language.

The main station communicates with all substations through a field bus.

Our system is flexible in adaptation and extension. It can be effortlessly connected to the LAN network of a vessel management system. Users, regardless of their professional knowledge of specific instruments, find our system easy to operate, thanks to the rich design of its display interface and the ease of its maneuver by the all-in-one track ball.

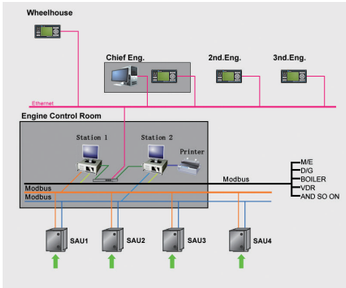

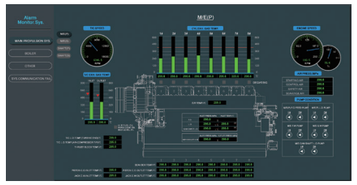

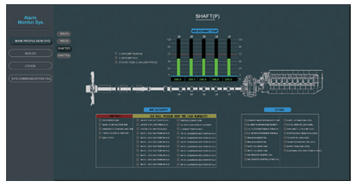

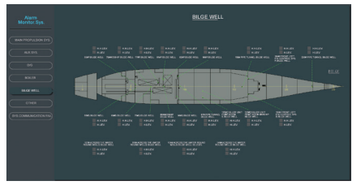

FUNCTION DESCRIPTION

1. The software runs under Microsoft WIN7;
2. All operations is through one trackball (mouse) only;
3. The color graphic display function (can be customized according to user requirements);
4. The simulation instrument display function;
5. Histogram display function;
6. Conventional list display function;
7. User-defined list display function;
8. Alarm list display function;
9. Alarm history display function;
10. Alarm history archive content display function;
11. Graph display function;
12. Contents list (Chinese/English) print function;
13. Print timing list of contents defined by user;
14. Print timing list of user-defined contents;
15. Print selected list;
16. Print alarm list;
17. Print alarm history;
18. Print alarm history archive content;
19. Time-set on-site print function;
20. Timing print interval time can be mended on site;
21. Alarm history content is automatically archived into hard disk every day;
22. The user can define the contents of the simulation instrument on site;
23. The user can define the contents of the histogram list on site;
24. The alarm display window will automatically pop up whenever any new alarm appears no matter what is in display on the screen;
25. The user can choose whether to use the alarm window on site;
26. According to the pre-set conditions, the system automatically archives all monitoring points status into hard disk;
27. Archive all monitoring points status into hard disk manually;
28. The daily graph content is automatically archived into the hard disk;
29. User can view the archived contents any time;
30. Automatic or manual alarm exit function;
31. Chinese/English interface switching function;
32. Alarm extension function.

APPLICATION EXAMPLES

Coast Guard 718
Official Patrol vessel

No.3 YuanWang
Space Survey Vessel

No.7 YuanWang Space Survey Vessel

CRCC 5000m³ Cutter Suction Dredger

SB-98K PROPULSION MACHINERY REMOTE CONTROL SYSTEM

PRODUCT OVERVIEW

SB-98K propulsion machinery remote control system for diesel engines is designed for the main propulsion equipments of a medium speed,non-reversible engine with clutch gearboxes. A crewmember can control disengagement, engagement of the gearbox and set the speed of the main engine directly by the remote control maneuvering lever on bridge or from engine control room.

FUNCTION DESCRIPTION

1. The remote control of main engine's speed and gearbox's engagement, disengagement and reversion;
2. There is a main engine speed increase and decrease load program to prevent main engine thermal load dramatic changes;
3. The speed's closed-loop control function to make up the lack of the governor performance;
4. Low speed regular reversion and emergency astern control;
5. Cooperating with security system to realize the slow down funtion;
6. Emergency disengagement function at shutdown;
7. Avoiding critical speed automatically;
8. Max speed limit;
9. Cooperating with security system to realize shutdown, slowdown and override function;
10. Main power failure protection;
11. Air pressure low protection;

TECHNICAL SPECIFICATIONS:

- Model: SB-98K;
- Format: electric remote control, single handle stepless automatic control, logic control, electrical signal connection and instructions;
- Air source unit (option): Working air pressure ranges from 0.63 to 0.68 MPa, the input air should be clean and dry compressed air,whose pressure ranges from 1.0 to 1.5 MPa, with the air filter, precision less than 50u;
- Power source: two routes, one AC220V and the other DC 24V(ripple coefficient less than ±5%,voltage fluctuation less than ±20%) with the power consumption for each control station is less than 100 Watts;
- Working environment temperature range 0°C~±55°C;
- The speed control (closed-loop control) : less than ±1%;
- Remote control output speed for electrical signal: 4-20 mA;
- The environment adaptability and various functions in accordance with the requirements of all classification societies.

SB-98K-D-I PROPULSION MACHINERY REMOTE CONTROL SYSTEM

PRODUCT OVERVIEW

SB-98K-D-I is an propulsion machinery remote control system for the low-speed two-stroke engine or the medium-speed engine with fixed reversible propellers. Through this system, a crew member can start, reverse, stop the main engine and set its speed by simply operating the engine telegraph lever on bridge or in engine control room.

FUNCTION DESCRIPTION

1. Main engine remote control has starting interlock function;
2. Main engine remote control has three times repeat starting function;
3. Main engine remote control has ahead and astern reversing function;
4. Main engine remote control has emergency reversing function;
5. Main engine remote control has slow turning function;
6. Main engine remote control has load acceleration and deceleration program control function;
7. Main engine remote control has automatic critical speed avoiding function;
8. Main engine remote control has maximum speed limit function;
9. Cooperating with security system to realize shutdown, slowdown protection and alarm function;
10. Cooperating with security system to realize the shutdown and slowdown override function;

TECHNICAL SPECIFICATIONS:

- Model: SB-98K-D-I;
- Format: single handle automatic control, logic control;
- Power source: two routes, one AC220V and the other DC 24V(ripple coefficient less than ±5%,voltage fluctuation less than ±20%) with the power consumption for each control station is less than 100 Watts;
- Working environment temperature range 0°C~±55°C;
- The speed control (closed-loop control) : less than ±1%;
- Remote control output speed for electrical signal: 4-20 mA;
- The environment adaptability and various functions in accordance with the requirements of all classification societies.

06 SB-3000 MONITORING & ALARM SYSTEM

PRODUCT OVERVIEW

SB-3000 Monitoring & Alarm System, well adaptable to various undesired working environments, is designed and manufactured according to the relevant requirements of marine engine room automation.

The system adopts modularization with flexible installation. It fulfills the functional requirements of the M/E engine local alarm cabinet, the medium or small sized marine engine room monitor and alarm system, and the safety system.

Its design and environmental adaptability comply with standards and regulations of all classification societies, which can be used in all kinds of ships, power stations, chemical industries and other industrial sections, to monitor the working processes and to provide users with useful and real-time information.

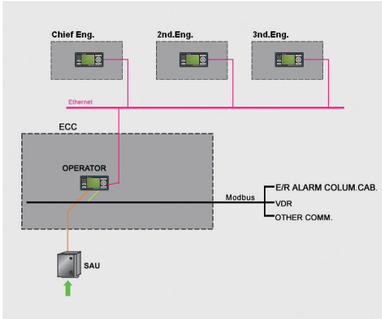

FUNCTION DESCRIPTION

1. Types of Input Measuring Signals:
   a. Binary Signals (passive contact signals only);
   b. 4-20mA Current Signals;
   c. 1-5V/2-10V Voltage Signals;
   d. Resistance Signals;
   e. Thermocouple Signals;
   f .Frequency Signals;
2. Acoustic and Visual Alarms;
3. Parameter Display of Measuring Points;
4. Alarm Lock Function;
5. Extension Alarm Function;
6. Sensor Failure Self-Check Function;
7. Parameter Modification Function;
8. The alarm modes and the values of analogue signals can be set on site;
9. The alarm modes of binary signals can be set on site;
10. The alarm properties of measuring points can be set on site;
11. The alarm delay time period can be set on site;
12. The system can output 4-20mA current signals to drive meters (max. 32) (Optional);
13. The system can output binary signals (passive contact signals only) (max.40) (Optional);
14. The system can output signals of the status of measuring points by communication (RS485);
15. The system can output contact signals of M/E running status;
16. The system can output system fault contact signals of CPU failure;
17. The system consists of Chinese/English bilingual user interface, which can be changed freely;
18. The system's main power AC220V and the backup power DC24V can be switched over automatically giving out power failure alarms;
19. System failure signal output;
20. Alarm lights panel (optional);
21. Liquid extension display station (optional);
22. VDR communication interface (optional);

When the system is used as a safety system, it is additionally equipped with the following functions:

23. Auto shutdown and auto shutdown pre-alarm function;
24. Auto slowdown and auto shutdown pre-alarm function;
25. Auto Shutdown and auto slowdown override function;
26. Command lever zero position input interface at the control position (i.e. auto shutdown "RESET" signal input interface);

CSBPZ MAIN SWITCHBOARD 07

PRODUCT OVERVIEW

Supplied by main source, the main switchboard distribute and control the power to switches and control various equipment on vessels. Its main function includes controlling and monitoring single or parallel operation of generator sets; switching on/off power distributors for each electrical equipments.

FUNCTION DESCRIPTION

The Main switchboard has various operational functions which are required by classification societies. Our products can be customized to meet users needs and habits. The automatic power station management system makes the power distribution and management more intelligent.

The main functions of PMS are listed as follow:

1. Remote control start and stop of generator set;
2. Priority selection of backup generator set;
3. Frequency adjustment of main switchboard;
4. Voltage and frequency monitoring of the main bus bar;
5. Load distribution;
6. Load monitoring;
7. Overload monitoring and automatic start of backup generator set;
8. Overload monitoring and priority uninstallation;
9. Automatic split and stop of generators;
10. Heavy load inquiry;
11. Manual / automatic synchronization;
12. Automatic backup power station;

CSBPY EMERGENCY SWITCHBOARD

APPLICATION EXAMPLES

65m AHTS of
Wuchang Shipbuilding
Industry Group Co., Ltd

CR81600 DWT
Bulk Carrier of Jinling Shipyard

65M AHSV
Malaysian Shipyard

PRODUCT OVERVIEW

Emergency switchboard is used in emergency. It should be as close to emergency power as possible. When the main power comes from the emergency generator, the emergency switchboard should be with the emergency power in the same site unless it could interfere with the operation of the emergency switchboard.

FUNCTION DESCRIPTION

Emergency switchboard accepts the power from the emergency generator and distribute the power to various emergency equipments on the ship. It can control and monitor the operation of the emergency generator units and control power distribution switches for various electrical equipments as well.

09 POWER MANAGEMENT SYSTEM

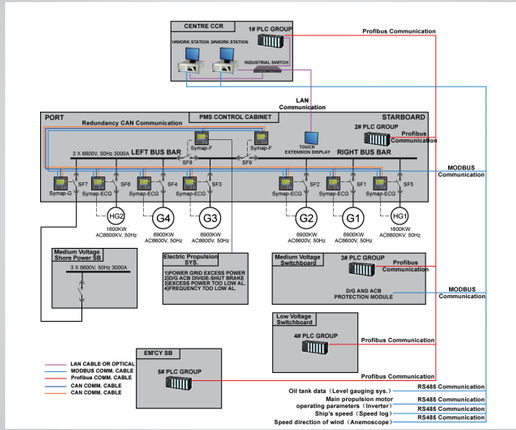

PRODUCT OVERVIEW

Power Management System(PMS) consists of Siemens S7-300 or S7-200 PLC, Symap-ECG, Symap-F and computer workstations.PLC should be installed in the switchboard. The computer workstations should be installed on engine control console for remote monitoring and controlling.

FUNCTION DESCRIPTION

1. Remote screen controls semi-automatic start and stop of generator and conventional frequency and load regulation, automatic paralleling and tripping process, lower voltage protection, overload protection, short circuit protection and running status monitoring, etc;
2. Monitors the main generator operation status (voltage , current, power, frequency) and the switching on/off status of the main switch;
3. Monitors the total power and residual power of the power station;
4. Heavy load inquiry under semi-automatic condition;
5. Remote view of the start, stop priority of the generator and remote amend the priority;
6. Remote or site view the cumulative time of generator;
7. Automatically starts the backup generator and restores the power supply when the network generator is abnormal tripping or over current failure;
8. Remote screen control switching on/off of load;
9. Remote view of the system communication state;

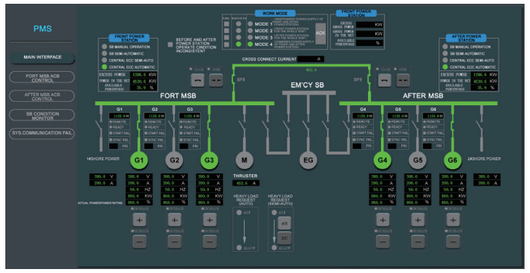

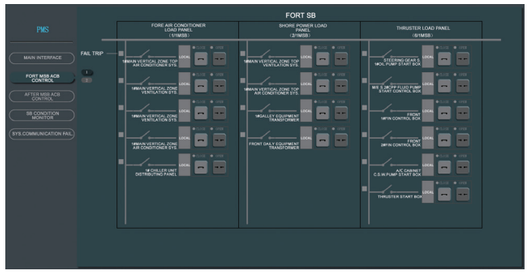

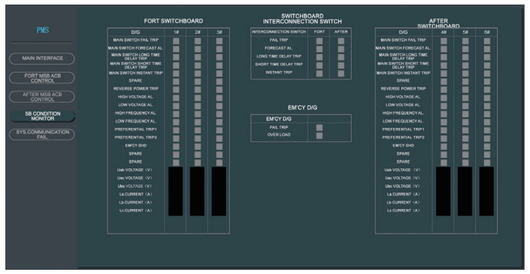

10 SB-LV GAUGE LEVEL REMOTE CONTROL SYSTEM SB-RCV-I HYDRAULIC VALVE REMOTE CONTROL SYSTEM

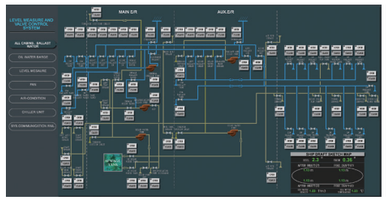

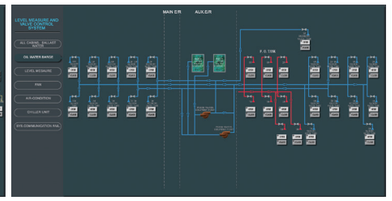

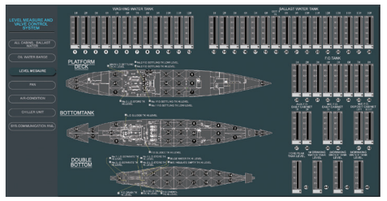

PRODUCT OVERVIEW

SB-LV Gauge Level Remote Control System

We usually use the artificial scale to measure the gauge level state of the ship's oil and water tank, but it is primitive, time-consuming and extremely rough of the measurement value, especially in the situation of adding oil or water, due to that the pump inlet fluid volume is fast but the manual measurement is so slow. Overflow often happens. More importantly, it is hard for the conductor to get a correct understanding of the ship's oil and water reserves as well. With technical advance, the gauge level remote control system is created. This system uses the host computer configuration monitoring software for datas and signals collection. It has advanced and reliable performance, visual display, simple operation which flags a new chapter of the ship monitoring automation.

SB-RCV-I Hydraulic Valve Remote Control System

The valve remote control system is a very important system on the ship. It is generally used in the ballast system and the transport system. It can control the opening and closing of the valve in the control room, which the crew can easily arrange the ballast water and fuel, obtain the desired state of the ship's draft to meet various requirements of working conditions of the ship. This system is the economic artery especially in the cargo oil system of tankers. It is important to have a safe and reliable valve remote control system for cargo oil's loading and unloading.

The valve remote control system has also solved the problem that the crew can operate the valve or valve remote operation workload, without access to those places. Valve remote control system greatly reduces the crew's work intensity and risks and thus further ensures the safety of the crew, which benefits ship navigation.

FUNCTION DESCRIPTION

1. The color graphic display function (can be customized according to user requirements);
2. The simulation instrument display function;
3. Histogram display function;
4. Conventional list display function;
5. User-defined list display function;
6. Alarm list display function;
7. Alarm history display function;
8. Alarm history archive content display function;
9. Graphs display function;
10. Contents list(Chinese/English) print function;
11. Print timing list of contents defined by user;
12. Print timing list of user-defined contents;
13. Print selected list;
14. Print alarm list;
15. Print alarm history;
16. Print alarm history archive content;
17. Alarm history content is automatically archived into the hard disk every day;
18. The alarm display window will automatically pop up whenever any new alarm appears no matter what display is on the screen;
19. Calculate the gauge volume according to the capacity table;
20. Data transmission through the communication interface;

11

SB-WCX-III INTEGRATED MONITORING AND CONTROL SYSTEM FOR DREDGERS

PRODUCT OVERVIEW

SB-WCX-III Integrated Monitoring And Control System for Dredgers consists of hardwares such as computers, PLC, actuators, ethernet, field bus networks, switches, sensors, conversion devices and various control consoles and/or cabinets.

The system is composed of several independent monitoring or operative sub-systems,such as an integrated dredging control system,a dredging orientation system,an engine monitoring and alarm system,a video monitoring system,a computer LAN network and so on.

The system combines all sub-systems to work organically by communicating and cooperating with each other,which further enhances the integral performance of the whole system.Meanwhile,from the view of hardware and functions,every sub-system is relatively independent from each other,which realizes the wisdom of 'divide-and-conquer'with grouped maneuvering control.The system is suitable to monitor and control a cutter suction dredger or a drag suction dredger.

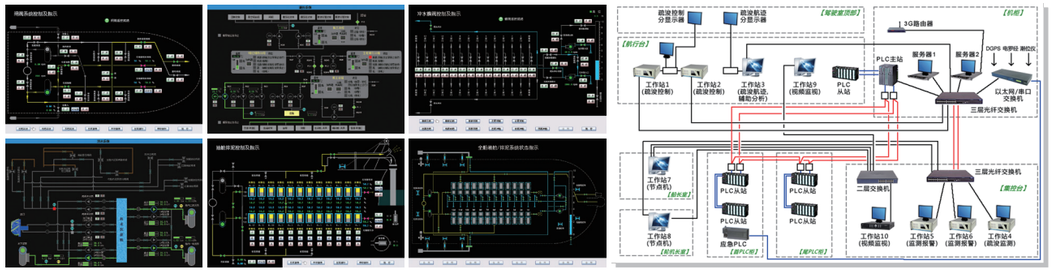

FUNCTION DESCRIPTION

Drag Suction Dredger

1. To display the positions of the drag suction tube;
2. To display the productivity meter;
3. To indicate and calculate stowage and soil quantities;
4. To indicate overflow tube position;
5. To indicate wave compensator position;
6. To indicate mud pump vacuum, suction port and discharge pressure;
7. To indicate flushing, water sealing pressure;
8. The dredging equipment control system (PLC system);
9. The full ship local area network system;
10. The remote data transmission system;
11. The video monitoring system;
12. The monitoring and alarm system in the engine room;
13. To orientate the dredging;
14. The automatic control system;
15. The auxiliary analysis system;

Cutter Suction Dredger

1. To display section planes of the chamfer;
2. To display the productivity meter;
3. To indicate mud pump vacuum, suction port and discharge pressure;
4. To indicate flushing, water sealing pressure;
5. The dredging equipment control system (PLC system);
6. The full ship local area network system;
7. The remote data transmission system;
8. The video monitoring system;
9. The monitoring and alarm system in the engine room;
10. To orientate the dredging;
11. The automatic control system;
12. The auxiliary analysis system;

驷博集团
SIBO GROUP

SIBO MONITORING CONTROL

APPLICATION EXAMPLES

pic1 Tianjin Dredging Co.,Ltd
13000m³/h Large Suction Hopper Dredger

pic2 Tianjin Dredging Co.,Ltd
3000m³/h Cutter Suction Dredger

pic3 Changjiang Waterway Bureau
8000m³/h Suction Hopper Dredger

pic4 Tianjin Dredging Co.,Ltd
4500m³/h Cutter Suction Dredger

pic5 Lianyungang Port Group
5000m³/h Suction Hopper Dredger

pic6 Changjiang Waterway Bureau
2000m³/h Suction Cupule Dredger

pic7 Lianyungang Port Group
3500m³/h Cutter Suction Dredger

pic8 CRCC Harbor & Channel Engineering Bureau Group 5000m³/h Cutter Suction Dredger

CSBJ
CONTROL CONSOLES

PRODUCT OVERVIEW

SIBO designs and manufactures integrated control consoles such as wheel house navigation consoles, engine room control consoles, wing control consoles, chart consoles, dredger control consoles and etc. Those consoles are highly reliable and good looking, which can be tailored to our clients specific needs.

No.7 YuanWang

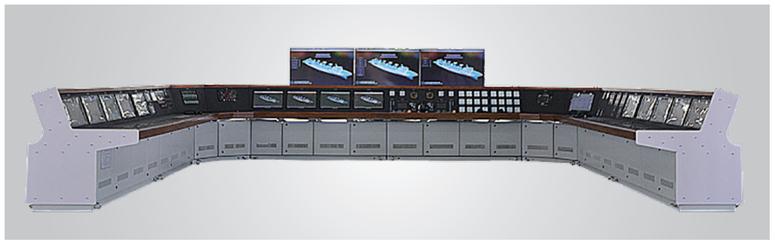

SB-NL/SB-SL
NAVIGATION LIGHTS/SIGNAL
LIGHTS CONTROLLER

PRODUCT OVERVIEW

Navigation lights / signal lights operating boards are usually embedded in the bridge console. They are mainly used for monitoring and control the navigation signal lights during sailing.

SB-NL Navigation Lights/SB-SL Signal Lights Controller are small and compact, whose high performance and reliability makes it convenient to install and operate. Their technical specifications confirm to all classification societies and can be widely used in all types of ships.

FUNCTION DESCRIPTION

1. Each controller can control up to 28 navigation lights and /or signal lights(both categorized as'exterior lights' for short in the following text) through switches on the panel and displays the lights's status by the indication lamps beside the switches;
2. Lamp test function;
3. Dimmer function;
4. Each exterior light has its own independent power supply with a separate fuse to protect its circuit;
5. The power supply of any exterior lights can be set to DC240V or Ac220V flexibly if needed;
6. Cable faults check function;
7. A fault of any exterior light activates an acoustic and visual alarm;
8. An exterior light can also be controlled by a connected external switch(optional);
9. The dimmer function be applied individually to any exterior light(optional);
10. The flash of any exterior light can be reflected on the panel by flashing the corresponding indication lamp,which is realized by means of exchange wiring(optional);
11. The controller support RS-485 standard communication ports of marine navigation and communication systems;
12. Meet the International Maritime Organization MSC.253 (83) resolution "navigation lights, navigation lights controller and related equipment performance standards";

SB-BNWAS NAVIGATION WATCH ALARM SYSTEM

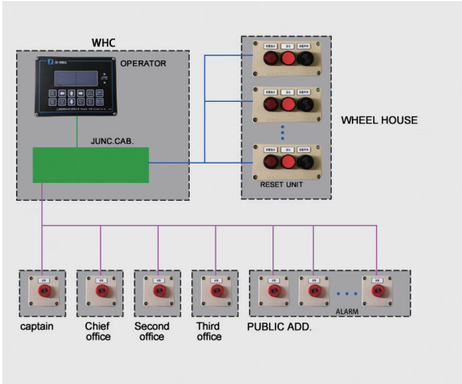

PRODUCT OVERVIEW

The purpose of the navigation watch alarm system is to prevent the driver from making the ship in the dangerous of unmanned operation. When this situation appears, the navigation watch alarm system will make a series of alarm extension until it successfully catches the attention of the relevant personnel to ensure the driver to perform his duty.

SB-BNWAS navigation watch alarm system is small and compact.It is handy to use with high reliability, which meets requirements from all classification societies. Our system can be widely used in all kinds of vessels.

FUNCTION DESCRIPTION

1. Operation Models: automatic, manual open, manual clearance;
2. Indicate and alarm procedures meet requirements of MSC. 128 (75);
3. Reset Models: reset button, arbitrary reset button on panel, sensor reset;
4. Emergency call function;
5. Chinese/English interface switch display function;
6. Operating mode switch, backup driver switch, alarm delay settings and parameter modifications are all protected by passwords, in case of wrong operation from unauthorized person;
7. The main power supply AC220V and the backup power supply DC24V.When the main power fails, it can be switched to backup power automatically.

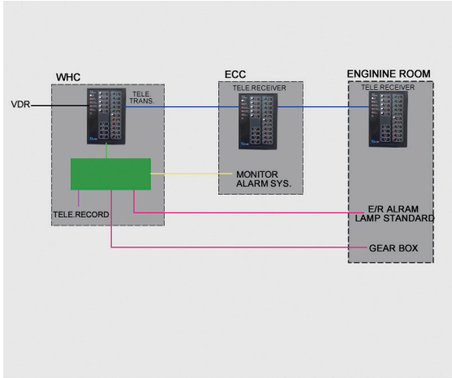

SB-TE-M TELEGRAPH SYSTEM

PRODUCT OVERVIEW

The telegraph system consists of 8 steps including Ahead Dead Slow, Ahead Slow, Ahead Half, Stop, Low Speed Astern, Astern Dead Slow, Astern Slow and Astern Half. If the captain wants to use Ahead Slow, he can push the telegraph forward two steps and the order will be transmitted to the engine room. After hearing the bell below, an engineer can push the telegraph to the same location until the bells stop ringing. (The bells from bridge and engine room are ringing at the same time as well as stopping at the same time.) The telegraph order will be executed immediately to the main engine. Generally it takes 40 minutes to prepare the engine. The officer and the engineer should check the consistency of the telegraph when the engine is standby.

SB-TE-M Telegraph System satisfies requirements of all classification societies, which makes it widely applicable to all types of ships either as a communication telegraph or as an emergency telegraph. With a compact structure easy to maintain, it can be used in multiple composite modes.

FUNCTION DESCRIPTION

1. The transmitter/receiver of the telegraph indicates every position;
2. The telegraph system shows the current position and the command position directed from the bridge. If the command position from the bridge is different from the acknowledgment position directed from the engine control room,the system gives out an acoustic and visual alarm;
3. The system shows the current position for the repeater;
4. The system shows the status of its power supply and triggers an acoustic and visual alarm for power failure;
5. The system gives out wrong way alarms;
6. The system gives out alarms when itself is in fault;
7. The system gives out alarms when the main engine is running in a different direction from the order;
8. The system can output common alarm signals to the ship's general alarm system as a passive digital signal;
9. The system can output passive contact acoustic signals to the combination alarm device in the engine room;
10. The system outputs signals of 4-20mA to the telegraph order printer;
11. The system outputs RS485 signals to a VDR through communication port;
12. The system is equipped with power modules,which switch to the backup power supply (DC24V) upon any main power failure (AC220V);
13. The transmitter and the receiver communicate by communication RS485.

SB-TR TELEGRAPH AUTOMATIC RECORDER

PRODUCT OVERVIEW

SB-TR Telegraph Automatic Recorder is a computer-controlled intelligent and automatic recorder for telegraph orders and main engine RPMs, which is designed to fulfill different requirements of engine telegraphs of all types so as to replace manual logbooks.Telegraph orders and the recorded status of the main engine's RPM are important legal materials for marine arbitrament in an average or a liability accident.

SB-TR Telegraph Automatic Recorder is small and compact, whose high performance and reliability makes it convenient to install and operate. Their technical specifications confirm to all classification societies and can be widely used in all types of ships.

FUNCTION DESCRIPTION

1. Save at least 2000 sets or more data;
2. Access the saved data;
3. Print the saved data in the selected time range;
4. The command of printing the stored data can be revoked;
5. Check the start/end time of the stored data;
6. Display the space and number of the saved data from the test;
7. Have the communication interface with the synchronized clocks;
8. Manually set the date and time;
9. Automatically print in real time according to the setting conditions;
10. With Chinese/English interface switch function;
11. With password setting function;
12. Access changes of the real time data;
13. Set the parameters and printing contents of the detection object;
14. Display the sample data contents of the analog and binary signal;
15. Automatically print the last shutdown date/time and the start date/time;
16. Use the international standard telegraph order sign;

SB-WD FOGHORN CONTROLLER

PRODUCT OVERVIEW

SB-WD Foghorn Controller is small and handy to install and use, it can be widely used in all types of ships, as its high performance and reliability meet various requirements of the all classification societies.

FUNCTION DESCRIPTION

1. SB-WD Foghorn Controller is an one-piece operating display panel(for double foghorns or a single foghorn) with an input/output (I/O)module;
2. The operating display panel is embedded in consoles. There is a power indication light, foghorn and fog-light indication lights, foghorn and fog-light working mode turning knobs,a heating control button,a lamp test button,a manual/automatic mode switch button and an automatic whistling mode button.The working mode can be set either to manual or to automatic.Upon needs, the user can choose to activate 1# foghorn or 2# foghorn or both at one time;
3. There are 5 modes of automatic whistling:1 long and 2 shorts/2 mins,2 longs/2 mins,1 long/2 mins,1 short,1 long and 1 short/min,and 1 long/min;
4. There is a dimmer knob on the operating display panel,which is used to tune those indicating lights;
5. SB-WD I/O module is comprised of an interface module and a control module. All I/O signals are input from the terminal board of the interface module.Among them, input signals can be voltages (AC220V or DC24V), contact signals from exterior manually-controlled buttons; while output signals can be:1#foghorn control contact signals, 2#foghorn control contact signals, heating control contact signals and fog-light control contact signals;